25.Fuel Filler Pipe

A: REMOVAL

WARNING:
Place "NO OPEN FLAMES" signs near the working area.

CAUTION:
Be careful not to spill fuel.

1) Set the vehicle on a lift.
2) Release the fuel pressure. <Ref. to FU(H4DOTC)-55, RELEASING OF FUEL PRESSURE, PROCEDURE, Fuel.>
3) Disconnect the ground cable from the battery.

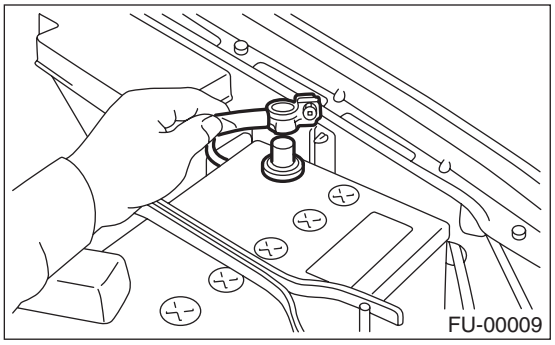

4) Open the fuel filler flap lid, and remove the fuel filler cap.
5) Remove the screws which secure gasket.

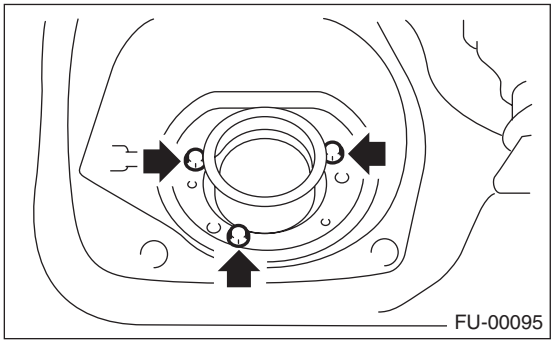

6) Remove the rear wheel RH.
7) Lift up the vehicle.
8) Drain the fuel tank. <Ref. to FU(H4DOTC)-55, DRAINING FUEL, PROCEDURE, Fuel.>
9) Remove the fuel filler pipe protector.

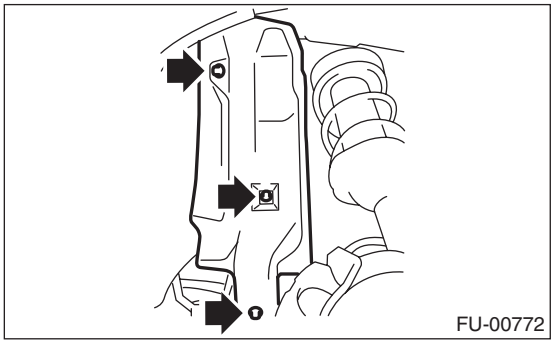

10) Disconnect the evaporation hose from the clip of fuel filler pipe.

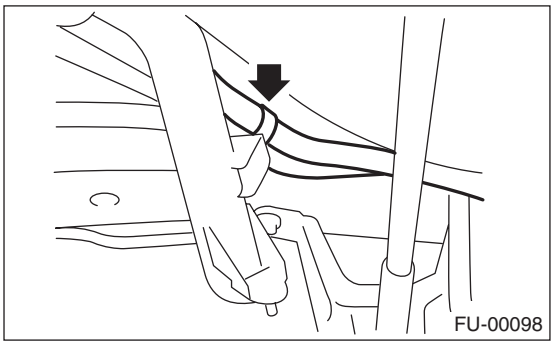

11) Disconnect the air vent hose from the fuel filler pipe.

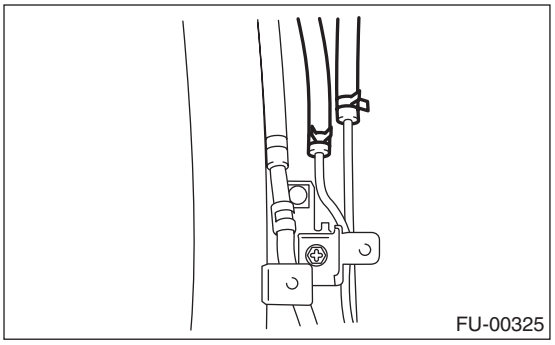

12) Remove the bolts which hold fuel filler pipe bracket on the body.

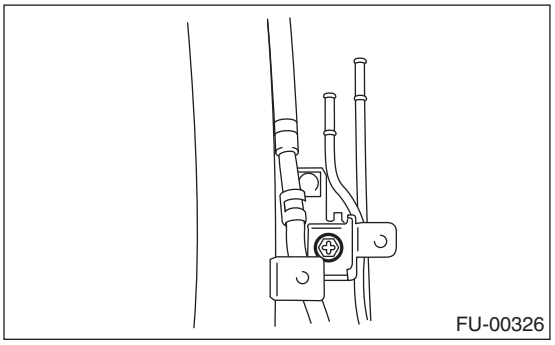

13) Loosen the clamp and disconnect the fuel filler hose (A) from the fuel filler pipe.
14) Loosen the clip and separate the evaporation hose (B).

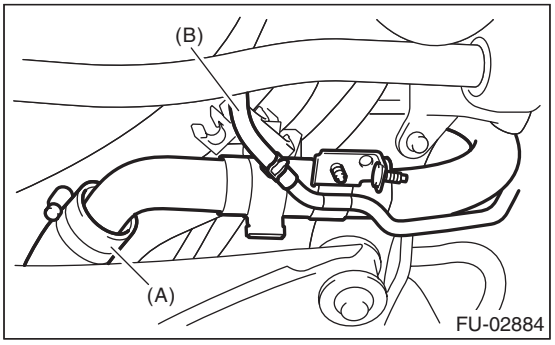

15) Remove the fuel filler pipe to the underside of the vehicle.

16) Remove the air vent pipe together with the clips from the body.

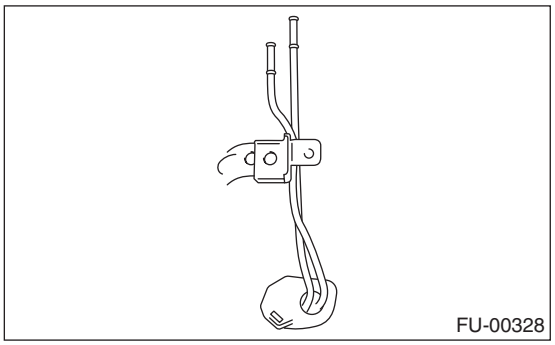

B: INSTALLATION

1) Open the fuel filler flap lid.
2) Set the fuel saucer (A) with rubber seal (C), and insert the fuel filler pipe into hole from the inner side of apron.
3) Align the holes in fuel filler pipe neck and set the cup (B), and tighten the screws.

NOTE:
If the edges of rubber seal are folded toward the inside, straighten it with a screwdriver.

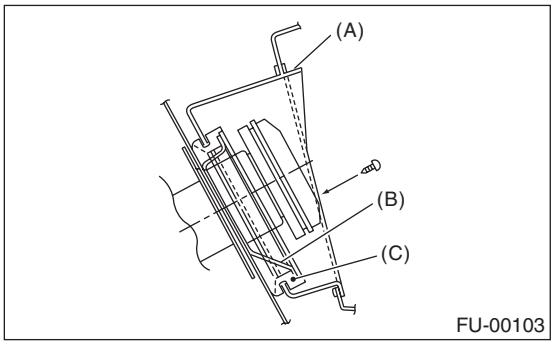

4) Connect the evaporation pipe.

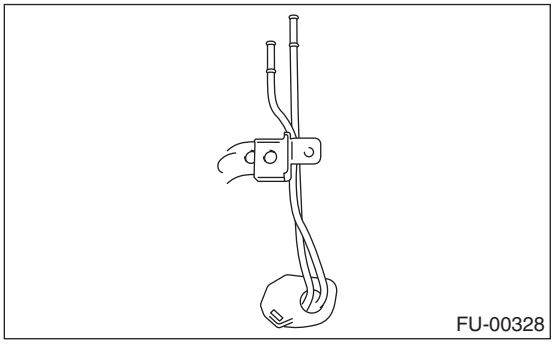

5) Connect the evaporation hose to the fuel filler pipe.

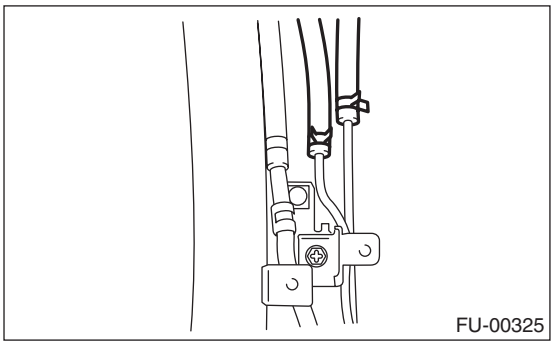

6) Connect the fuel filler hose (A) to the pipe with an overlap of 35 — 40 mm (1.38 — 1.57 in).
7) Connect the evaporation hose (B) to the pipe with an overlap of 25 — 30 mm (0.98 — 1.18 in).

L = 27.5±2.5 mm (1.083±0.098 in)

NOTE:
Do not allow the clips to touch other hoses and rear suspension crossmember.

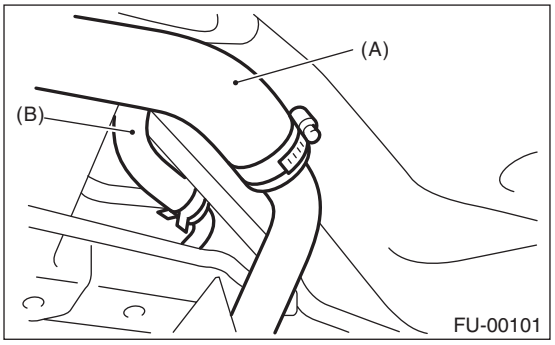

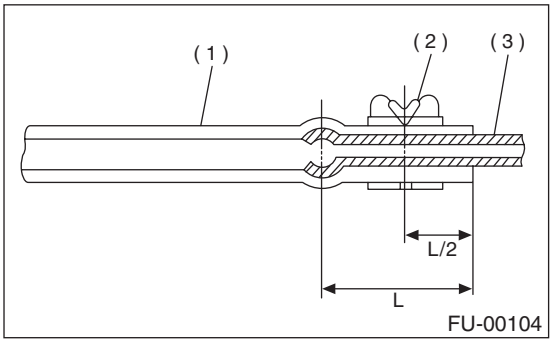

(1) Hose
(2) Clip
(3) Pipe

8) Tighten the bolts which hold fuel filler pipe bracket on the body.

Tightening torque:
7.5 N·m (0.76 kgf-m, 5.5 ft-lb)

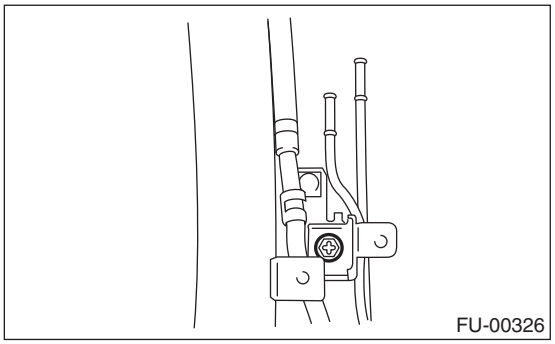

9) Fasten the evaporation hoses to the clip of fuel filler pipe.

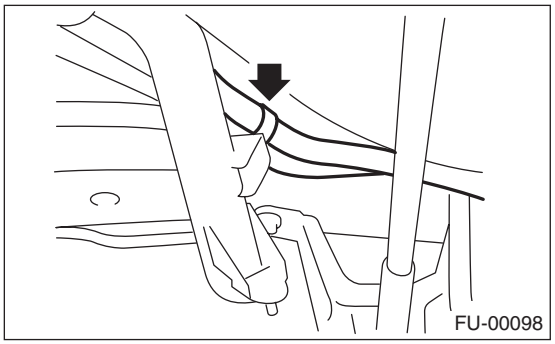

10) Install the fuel filler pipe protector.

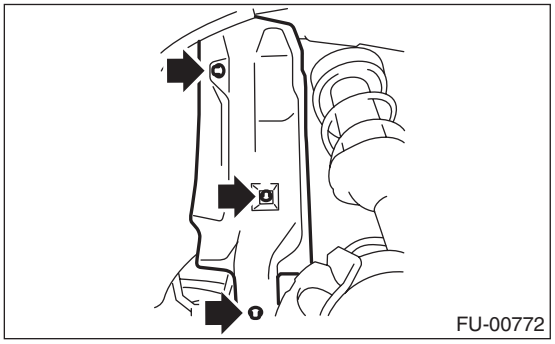

11) Lower the vehicle.
12) Install the rear wheel RH.

Tightening torque:
100 N·m (10.2 kgf-m, 73.8 ft-lb)

13) Connect the ground cable to the battery.

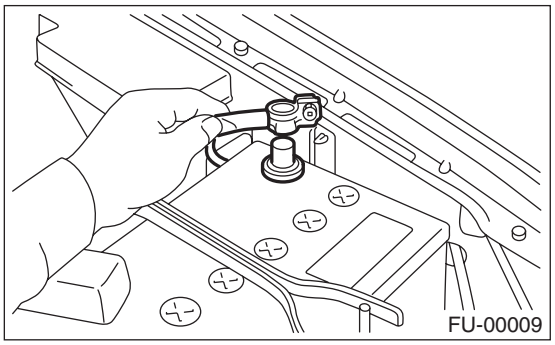

C: DISASSEMBLY

1) Move the clamp and disconnect the evaporation hose from the joint pipe.

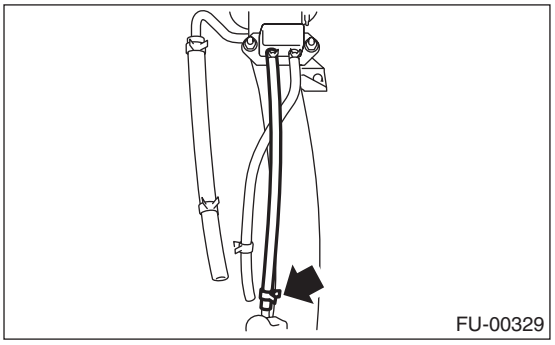

2) Remove the bolts which install joint pipe to the fuel filler pipe.

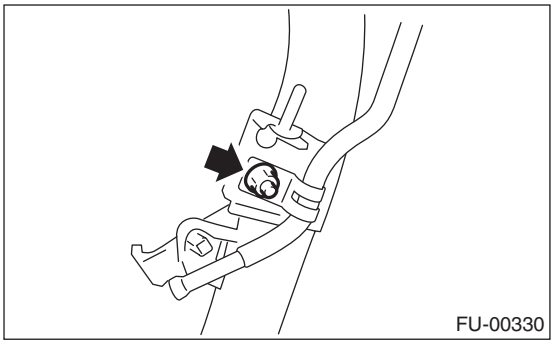

3) Disconnect the evaporation hose from the fuel filler pipe.

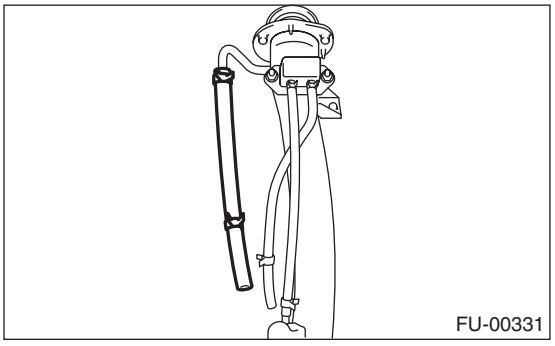

4) Remove the shut valve from the fuel filler pipe. <Ref. to EC(H4DOTC)-19, REMOVAL, Shut Valve.>

D: ASSEMBLY

1) Install the shut pipe to the fuel filler pipe. <Ref. to EC(H4DOTC)-19, INSTALLATION, Shut Valve.>
2) Connect the evaporation hose to the fuel filler pipe.

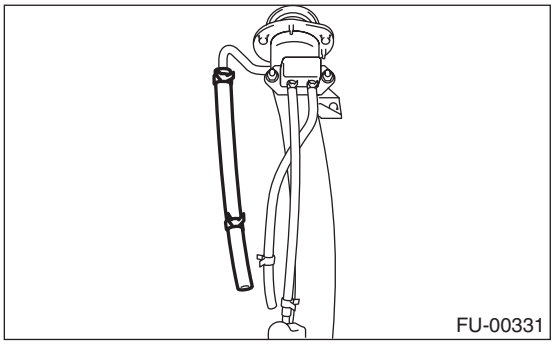

3) Connect the evaporation hose to the evaporation pipe.

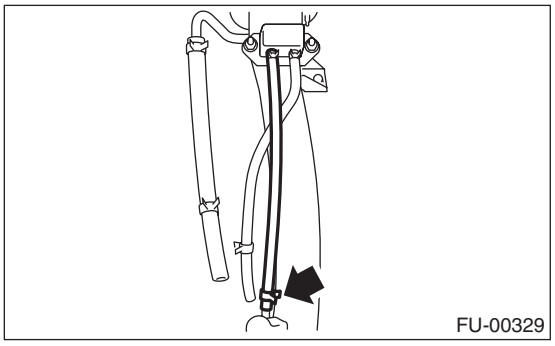
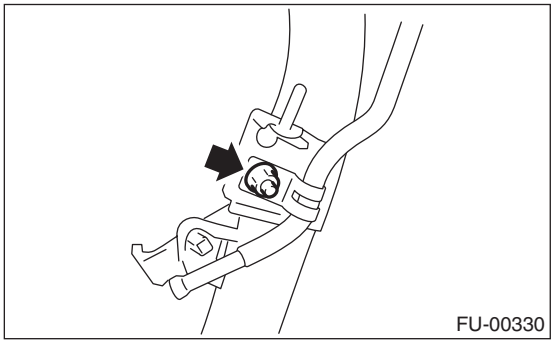
4) Connect the evaporation pipe to the fuel filler pipe.